HRL-P270AJ CE Programmable Hollow Shaft Encoder

Description

The HRL incremental encoder fits onto an existing shaft and converts shaft rotation into square wave pulses to provide an accurate and reliable means of digitizing position, rate, or length of travel. The number of pulses per shaft revolution is determined by setting configuration switches.

Model ID

HRL __ - P270AJ / __

Shaft diameter:
1 = 1″
M25 = 25mm
(Inquire for others)

Supply voltage:
5 or 8-30

Short lead time options are underlined.

Installation

1. Slide HRL onto shaft.
2. Fasten flexible mounting bracket (MB-FB1) to frame, or use other means to prevent rotation.
3. Tighten HRL shaft set screws.
4. Attach the cable leads to the control device (e.g. PLC) ensuring that the power supply meets specifications.
5. Set the configuration switches *(can be changed at any time)*.
6. Attach the cable to the encoder.

Dimensions

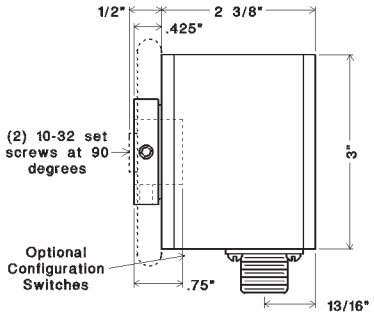

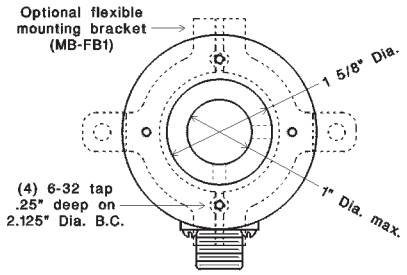

OVER 30 YEARS OF MATERIAL HANDLING AND INDUSTRIAL EXPERIENCE

PHOTOCRAFT INC

602 E. North Street
Elburn, IL 60119, USA

630-365-7148
Fax: 630-365-7149

www.photocraftencoders.com

Specifications

Electrical

Supply Voltage (V_{IN}): (see Model ID)
— 5 ± 5% vdc
— 8 to 30 vdc

Supply Current: 50ma maximum (no load)

Output Current (I_O): 50ma max source/sink

Output Circuit: Selectable by setting switches 6 to 8 (see figures 1 and 2)
— Current sinking NPN transistor
— Open collector (V_{CC}=30 vdc max)
— Current sourcing PNP transistor
— Combined sourcing/sinking output (push/pull output)

Operating temperature: -25° to +85° C

Maximum operating speed: 3,000 rpm

Outputs

Pulses per Revolution: Selectable by setting switches 1 to 5 (see figure 1)

Output Waveform: 50/50 squarewave
— **Pulse On-Off Ratio:** 50% ± 10%
— **Pulse Interval Jitter:** ±10%
— **Pulse rise time:** 2 µsec (max)
— **Pulse fall time:** 5 µsec (max)
— **Voltage (high):** V_{in}-2.5 vdc (min)
— **Voltage (low):** 1.5 vdc (max)

(600 rpm, V_{IN}=24vdc, 10ma<I_O<50ma, 25°C)

Anti-Jitter: The anti-jitter feature increases the pulse output hysteresis to ½ of a pulse width, eliminating the effects of mechanical vibration and the possible dither that results in false output pulses. For example, a 10 pulse per revolution output would have 18° hysteresis (i.e. 360° ÷ 10 × ½).

Mechanical

Weight: 16.8 oz (477 gm) without cable

Bearing Loading: 25 lb. radial (max)
10 lb. axial (max)

Bearing Life (L_{10}): 36 x 10^6/RPM = hours

Materials:
— Case: 1/4″ Aluminum, anodized
— Shaft: Aluminum
— Window: Plastic

Electrical Connections

Pin No.	Function	Wire Color
A	Supply Voltage	Red
B	Common	Black
C	Output	White
D	no connection	
E	no connection	
	Case Ground	Plain

Connector: MS3102A-14S-5P (5-pin)

Mating Connector: MS3106A-14S-5S

Accessories

Cable Assembly (C5-3-10): 10 ft. (3m) of 5 conductor, shielded cable with mating connector. Other lengths are available.
CE mark requires Photocraft cable, and surge protection if the cable exceeds 100′ (30m) or leaves the building.

Flexible Mounting Brackets:
flexible stainless steel that allows for axial and angular shaft misalignment. Call or see our website for more details.

Configuration Switches

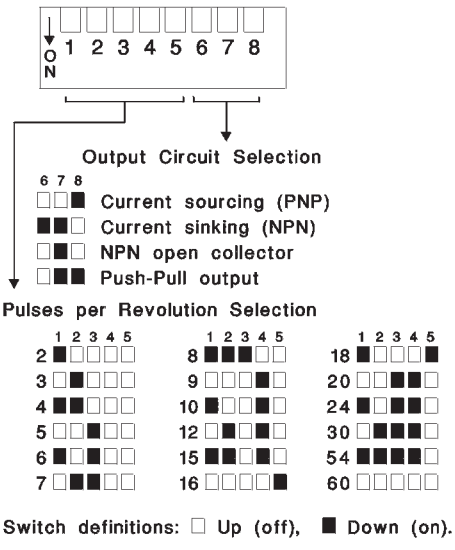

Figure 1 - Configuration Switches

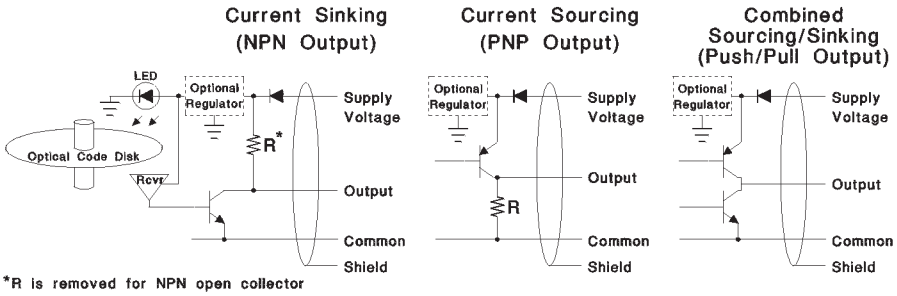

Figure 2 - Output Circuits