MB-FB2D Hollow shaft encoder mounting

DESCRIPTION

The MB-FB2D provides a means to mount the model HS20 hollow shaft encoder to a conveyor roller that is supported by a 2-bolt flange mount bearing with a bolt spacing of 3.75" to 6.75". It is commonly used with the MB-ST.5 shaft stub (not included) that is attached to the end of the conveyor roller and supports the HS20 encoder. The MB-FB2D provides a rigid tether, locked in place by a second MB-ST.5 shaft stub (included) that prevents the HS20 from rotating, yet has free non-rotational movement, thus avoiding excess load on the encoder bearings. A coupling nut anchors the tether shaft stub to one of the 1/2" threaded mounting studs of the flange bearing.

INSTALLATION

1. If using the MB-ST.5 shaft stub (purchased separately) drill and tap a 3/8-16 hole, at least 5/8" deep into the end of the conveyor shaft. Insert the MB-ST.5 shaft stub or equivalent. The shaft stub should be in-line with the shaft axis, so there is minimum wobble when the shaft is rotating.

2. Fasten the MB-FB2B rigid tether to the face of the encoder using the four 6-32 screws (supplied).

3. Attach the coupling nut and the shaft stub to one of the 1/2" threaded mounting studs of the flange bearing as shown. It may be necessary to remove the existing 1/2" nut.

4. Install the HS20 onto the shaft stub (MB-ST.5 or equivalent), such that the slot of the rigid tether fits over the second shaft stub as shown. Tighten the encoder set screws.

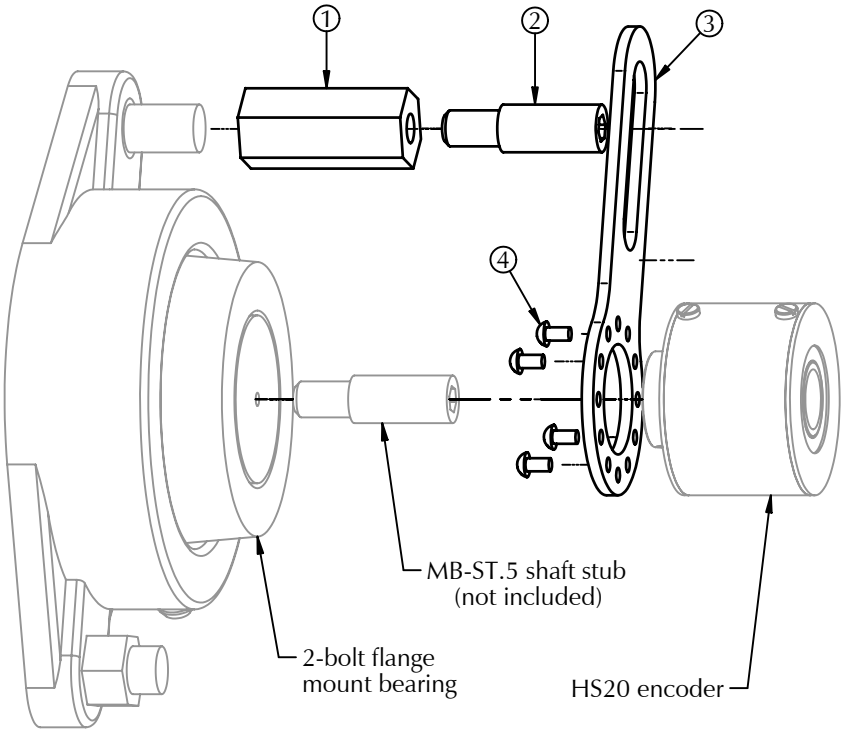

MB-FB2D includes the following parts			
#	Description	Part No.	Qty
1	Coupling nut	500-MCH118-0	1
2	MB-ST.5 shaft stub	500-MSC-ST.5	1
3	MB-FB2B rigid tether (aluminum)	500-MCH110	1
4	6-32 x 1/4" round head screw	550-SCR200	4

MB-ST.5 Shaft Stub

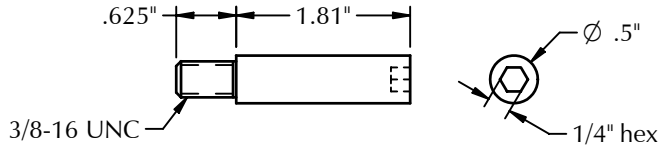

MB-FB2B Rigid Tether

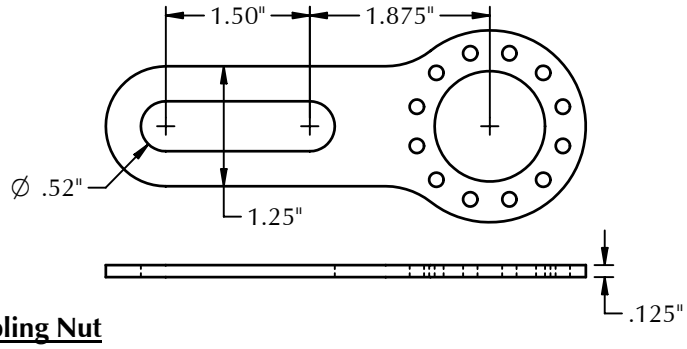

Coupling Nut

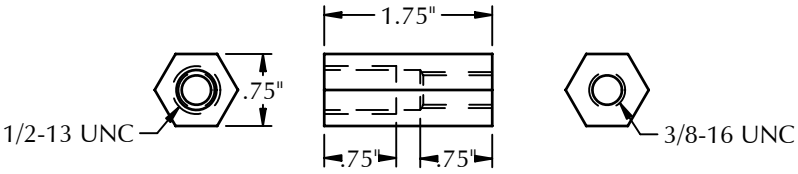

MATERIAL HANDLING AND INDUSTRIAL EXPERIENCE SINCE 1974

PHOTOCRAFT INC

602 E. North Street **630-365-7148**
Elburn, IL 60119, USA Fax: 630-365-7149
www.photocraftencoders.com