MB-T_ Torsion Spring Mounting

DESCRIPTION

The MB-T torsion spring wheeled encoder mounting assembly facilitates installation of the R21 or R22, or RH (with M266 modification) encoders onto a conveyor belt or roller, or other moving web. The adjustable torsion spring is locked into place to provide constant pressure of the wheel against the web, even for uneven surfaces. Adapting to a variety of installations is made possible through various mounting kits.

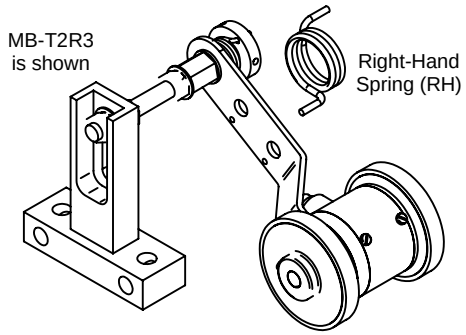

Figure 1: Typical Right-Hand Spring Configuration

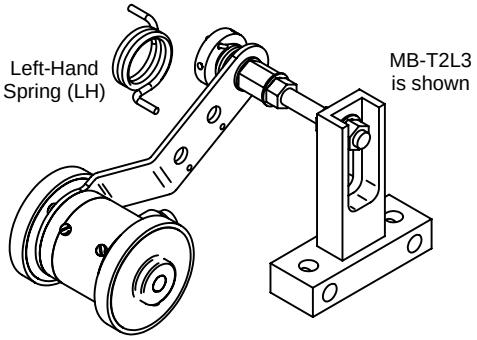

Figure 2: Typical Left-Hand Spring Configuration

INSTALLATION

1. Put the mandrel through one of the 3 holes in the encoder arm, with a nylon washer on each side of the encoder arm.
2. Place the spring on the mandrel, inserting the spring end into the small hole on the encoder arm.
3. Place the spring support through the spring and onto the mandrel so the encoder arm and 2 nylon washers are sandwiched between the 5/8 hex part of the mandrel and the spring support. Leave just enough slack so the encoder arm pivots freely.
4. Gently tighten one of the spring support set-screws.
5. Using one of the mounting kits, mount the encoder on the machine or conveyor.
6. Once the encoder and torsion spring mounting are in place, loosen the spring support set-screw.
7. Using a 3/32 allen wrench as a lever in one of the set screws, rotate the spring support clockwise (for LH spring) or counter-clockwise (for RH spring). About 1/10th of a rotation (30 degrees) will provide sufficient tension. Do not exceed 90 degrees.
8. Tighten all 3 spring support set-screws.

TORSION SPRING ADAPTER

(included with all kits)

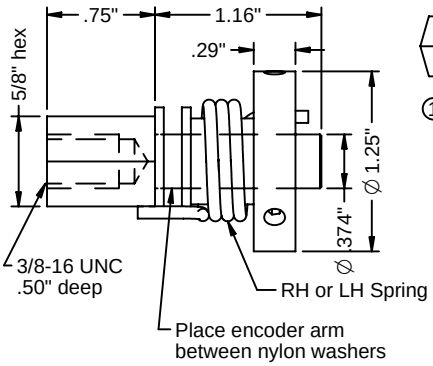

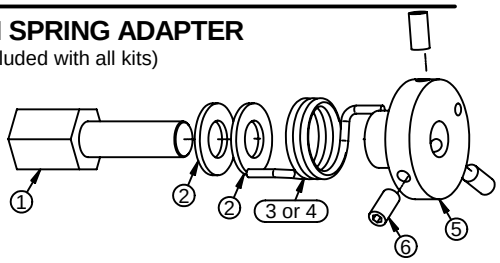

Torsion Spring Adapter Parts List			
#	Description	Part No.	Quantity
1	Mandrel	603-0555-01	1
2	Nylon washer	543-3806	2
3	RH Torsion spring	600-2188-01	optional
4	LH Torsion spring	600-2187-01	optional
5	Spring support	603-0554-01	1
6	Set screw	541-1017	3

MOUNTING KITS

(Each kit also includes a Torsion Spring Adapter with RH or LH spring)

Extension Rod Style

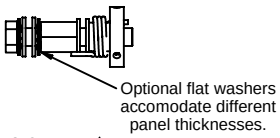

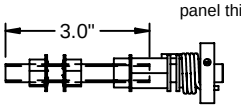

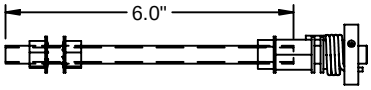

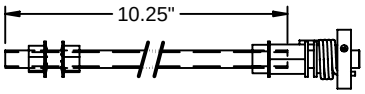

MB-T0_0 Mounting Kit with 0" Rod		
Description	Part No.	Quantity
3/8-16 x .75" Cap Screw	541-3800	1
3/8" Lock Washer	543-3809	2
3/8" Flat Washer	543-3810	2

MB-T0_3 Mounting Kit with 3" Rod		
Description	Part No.	Quantity
3" Threaded Rod	603-0558-01	1
3/8" Lock Washer	543-3809	3
3/8-16 Hex Bolt	542-3804	3

MB-T0_6 Mounting Kit with 6" Rod		
Description	Part No.	Quantity
6" Threaded Rod	603-0287-01	1
3/8" Lock Washer	543-3809	3
3/8-16 Hex Bolt	542-3804	3

MB-T0_10 Mounting Kit with 10.25" Rod		
Description	Part No.	Quantity
10.25" Threaded Rod	603-0279-01	1
3/8" Lock Washer	543-3809	3
3/8-16 Hex Bolt	542-3804	3

Base and Post Styles
(all are supplied with some extension rod)

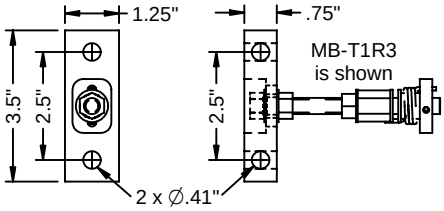

MB-T1__ Mounting Kit with Base		
Description	Part No.	Quantity
Base	603-0556-01	1
Extension Rod kit (shown above)	MB-T0__	1

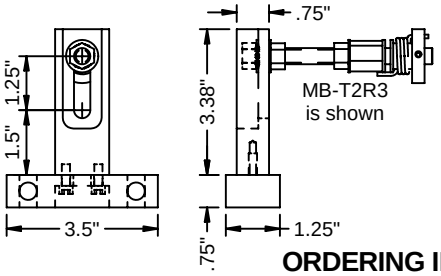

MB-T2__ Mounting Kit with Base and Post		
Description	Part No.	Quantity
Base	603-0556-01	1
Post	603-0557-01	1
10-24 Cap Screw	541-1016	2
Extension Rod kit (shown above)	MB-T0__	1

ORDERING INFORMATION

MB-	T			
Mounting Bracket	**Torsion Spring**	**Style:** **0**=Rod Only **1**=Base and Rod **2**=Base, Post, Rod	**Spring:** **R**=Right Hand **L**=Left Hand	**Rod Length:** **0**=0", **3**=3", **6**=6" **10**=10.25"

Example Models:

MB-T0L6 - Extension rod style, LH spring, 6" threaded rod
MB-T1R0 - Base style, RH spring, 0" extension rod
MB-T2R10 - Base and Post style, RH spring, 10.25" rod
MB-T - Universal kit containing all components to assemble any of the styles.

TRI-TRONICS®
MATERIAL HANDLING AND INDUSTRIAL EXPERIENCE SINCE 1974
PHOTOCRAFT Encoders
PO Box 25135 813-886-4000
Tampa FL 33622-5135, USA 800-237-0946
ttco.com • photocraftencoders.com